CERTIFICATE

Certified Passive House Component

Component-ID 2150wi03 valid until 31st December 2024

Passive House Institute
Dr. Wolfgang Feist
64283 Darmstadt
Germany

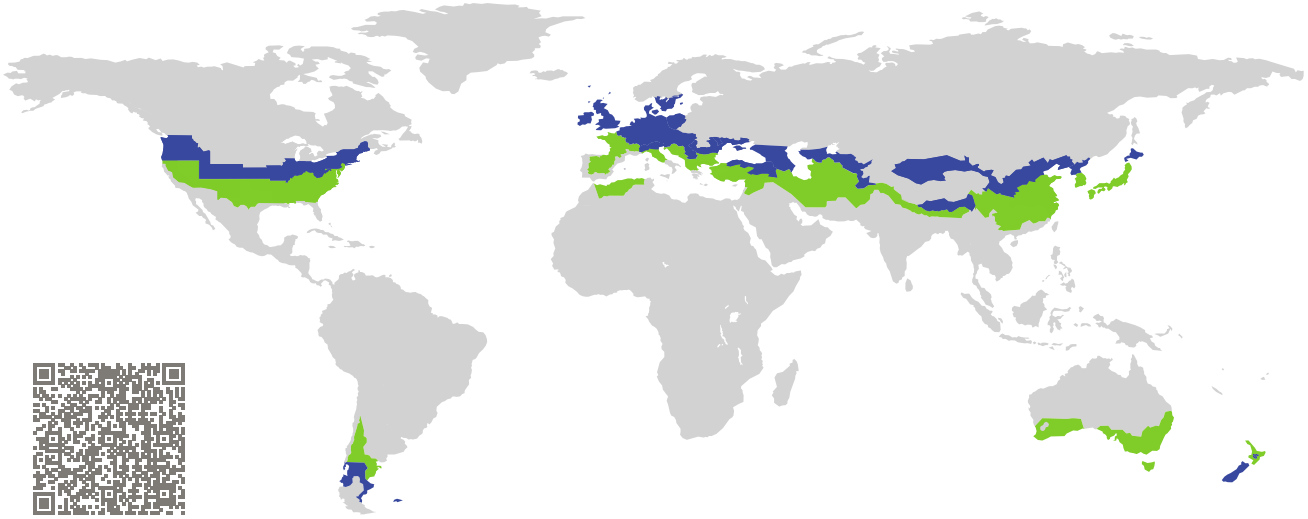

Category:	**Window Frame**
Manufacturer:	**Tryba (Shanghai) Windows & Doors Co., Ltd, Shanghai, China**
Product name:	**Expectation K08**

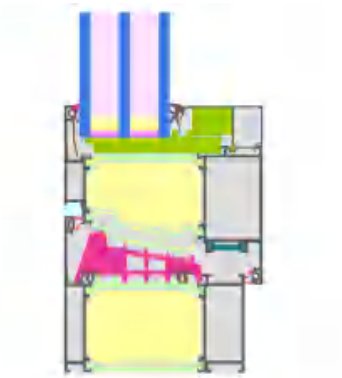

This certificate was awarded based on the following criteria for the cool, temperate climate zone

Comfort	$U_W = 0.77$	$\leq$	$0.80\ W/(m^2 \cdot K)$
	$U_{W,installed}$	$\leq$	$0.85\ W/(m^2 \cdot K)$
	with U_g	=	$0.70\ W/(m^2 \cdot K)$
Hygiene	$f_{Rsi=0.25}$	$\geq$	0.70

cool, temperate climate

phB

CERTIFIED COMPONENT

Passive House Institute

Passive House efficiency class	phE	phD	phC	phB	phA

www.passivehouse.com

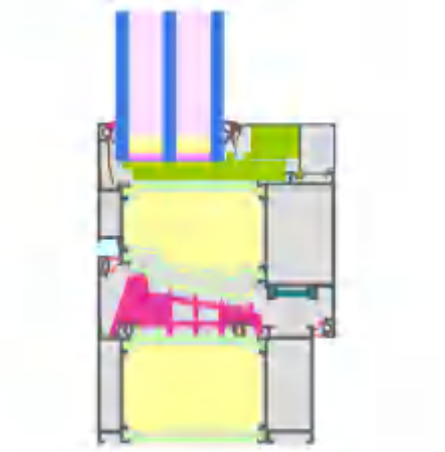

Calculation model

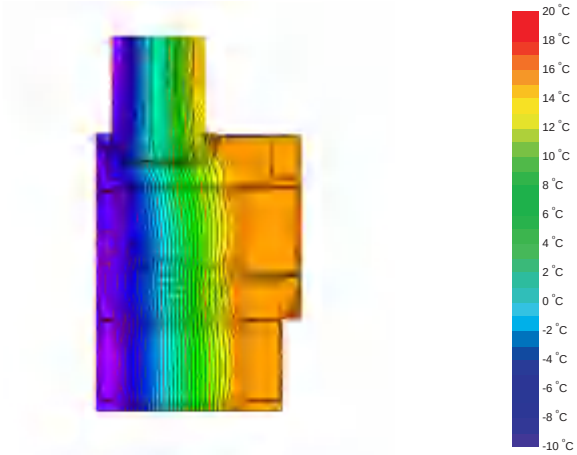

Isothermal

Description

Aluminium frame with thermal separation (Noryl 0.175 W/(mK)) and insulation (Kooltherm 0.022 W/(mK), PE foam 0.038 W/(mK)); Pane thickness: 50 mm (6/16/6/16/6); Rebate depth: 18 mm; Spacer: Swisspacer Ultimate PRO; Secondary sealing: Polysulfid

Explanation

The window U-values were calculated for the test window size of 1.23 m × 1.48 m with U_g = 0.70 W/(m^2 · K). If a higher quality glazing is used, the window U-values will improve as follows:

Glazing	U_g =	0.70	0.64	0.58	0.54	W/(m^2 · K)
		↓	↓	↓	↓	
Window	U_W =	0.77	0.73	0.70	0.67	W/(m^2 · K)

Transparent building components are classified into efficiency classes depending on the heat losses through the opaque part. The frame U-Values, frame widths, thermal bridges at the glazing edge, and the glazing edge lengths are included in these heat losses. A more detailed report of the calculations performed in the context of certification is available from the manufacturer.

The Passive House Institute has defined international component criteria for seven climate zones. In principle, components which have been certified for climate zones with higher requirements may also be used in climates with less stringent requirements. In a particular climate zone it may make sense to use a component of a higher thermal quality which has been certified for a climate zone with more stringent requirements.

Further information relating to certification
can be found on www.passivehouse.com and passipedia.org.

Validated installations

formwork blocks	
U_{Wall} = 0.15 W/(m² · K)	

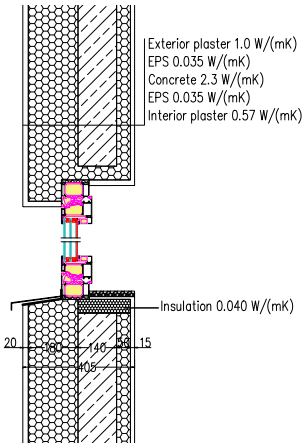

$\Psi_{install}$	W/(m · K)
Top	0.014
Side	0.014
Bottom	0.019
$U_{W,installed}$ = 0.81 W/(m² · K)	

Exterior insulation and finishing system	
U_{Wall} = 0.13 W/(m² · K)	

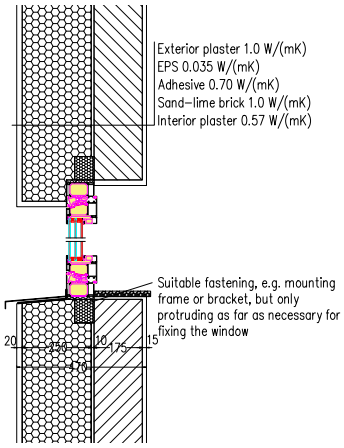

$\Psi_{install}$	W/(m · K)
Top	0.017
Side	0.017
Bottom	0.023
$U_{W,installed}$ = 0.82 W/(m² · K)	

Cavity wall	
U_{Wall} = 0.13 W/(m² · K)	

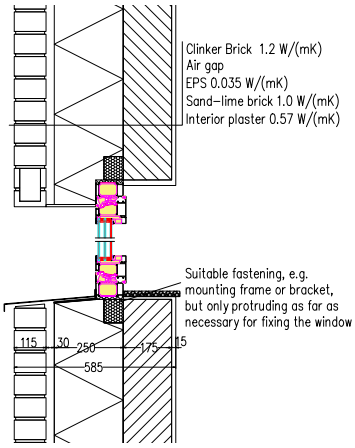

$\Psi_{install}$	W/(m · K)
Top	0.017
Side	0.017
Bottom	0.023
$U_{W,installed}$ = 0.82 W/(m² · K)	

Frame values			Frame width b_f mm	U-value frame U_f W/(m² · K)	Ψ-glazing edge Ψ_g W/(m · K)	Temp. Factor $f_{Rsi=0.25}$ [-]
Transom 1 casement	(1T1)		180	0.66	0.032	0.77
Bottom	(OB1)		149	0.67	0.035	0.77
Top	(OH1)		149	0.67	0.035	0.77
Lateral	(OJ1)		149	0.67	0.035	0.77
Spacer: SWISSPACER ULTIMATE PRO				Secondary seal: Polysulfide		